SEA-BIRD SCIENTIFIC

SATLANTIC

User's Manual

PAR Sensor - Logarithmic Analog

Applies to serial numbers above 1000

Titanium and Plastic Housing PAR Sensors

Document No:	SAT-DN-00636
Revision:	A
Date:	2015-01-14

CE

Satlantic LP
3481 North Marginal Road Halifax,
Nova Scotia, Canada B3K 5X8

Tel: +1 902 492 4780
info@satlantic.com
www.satlantic.com

Copyright © 2015, Satlantic LP, 3481 North Marginal Road, Halifax, Nova Scotia B3K 5X8 Canada All rights reserved

Revision History

Document Version	***Description***	***Date***	***Editor***
A	Initial Release	2015-01-14	Scott Feener, P.Eng.

Copyright © 2015 Satlantic LP All rights reserved.

Table of Contents

1 Introduction 4
1.1 Purpose 4
1.2 Definitions, Acronyms and Abbreviations 4
1.3 Referenced Documents 4
2 Description 5
2.1 Specifications 5
3 Safety 6
3.1 Personal Safety 6
3.1.1 Flooded Instrument 6
3.1.2 Electricity 6
3.2 Equipment Safety 6
3.2.1 Instruments 6
3.2.2 Connections 6
3.2.3 Recovery 6
4 Operation 7
4.1 PAR Calculation from Logarithmic Analog Signal 7
4.2 PAR Calibration Coefficients for Sea-Bird Electronics Seasave 7
5 Maintenance 8
5.1 Preventive Maintenance 8
6 Warranty 9
7 Contact Information 10
Location 10
Business Hours 10
8 Declaration of Conformity 11

Copyright © 2015 Satlantic LP All rights reserved.

1 Introduction

1.1 Purpose

Photosynthetically **A**ctive **R**adiation, PAR, is the spectral range of solar radiation from 400 to 700 nm. Phytoplankton and higher plants use electromagnetic energy in the PAR region for photosynthesis. PAR is usually measured as Photosynthetic Photon Flux Density (PPFD), which has units of quanta (photons) per unit time per unit surface area. The units most commonly used are micromoles of quanta per square meter per second (µmol photons·m^{-2}·s^{-1}).

PAR is an important parameter used in energy balance models, ecosystem characterization, and productivity analyses for agronomic, oceanic, and limnological studies. In addition, measurements of PAR are routinely used in laboratory studies focusing on plant physiology and photosynthesis.

Satlantic PAR sensors measure quantum irradiance with near flat spectral response and cosine spatial response. Cosine collectors for in air and in water measurements, housings for two depth ratings, and digital and analog data output options, listed below, support integration of the PAR sensor in instrument packages for a range of deployment conditions.

Optical
- ICSW Irradiance Cosine in Water
- ICSA Irradiance Cosine in Air

Depth rating
- 1000m Plastic housing
- 7000m Titanium housing

Data interface
- SER RS-232 Serial ASCII
- LIN Linear Analog 0.125 – 4.0V
- LOG Logarithmic Analog 0.125 – 4.0V

Platform custom integration
- AUV Through-hull mounting in Slocum Glider

This manual describes the following PAR Sensor models.
- PAR LOG ICSW 1000m
- PAR LOG ICSW 7000m
- PAR LOG ICSA 1000m
- PAR LOG ICSA 7000m

Figure 1 PAR Sensors

1.2 Definitions, Acronyms and Abbreviations

AUV	Autonomous Underwater Vehicle
ICSA	Irradiance Cosine in Air
ICSW	Irradiance Cosine in Water
LIN	Linear Analog Output
LOG	Logarithmic Analog Output
PAR	Photosynthetically Active Radiation
PPFD	Photosynthetic Photon Flux Density
SER	Serial, RS-232, ASCII output

1.3 Referenced Documents

RD1. Sea-Bird Electronics Seasoft V2: Seasave V7 User's Manual 03/18/14, www.seabird.com

Copyright © 2015 Satlantic LP All rights reserved.

2 Description

2.1 Specifications

Optical

Spectrum	400 – 700 nm, Figure 2
PAR Range	0.1 - 5000 µmol photons·m^{-2}·s^{-1}
Spatial	cosine response, Figure 3
Cosine error	<3% 0° – 60° <10% 60° – 85°
Collector area	86 mm^2
Detector	17 mm^2 silicon photodiode

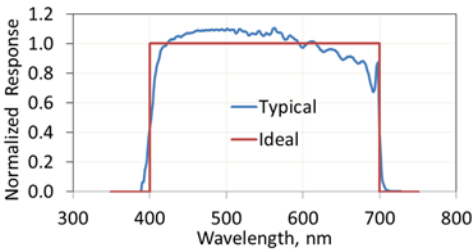

Figure 2 Spectral Response

Electrical

Connector	Subconn MCBH4M

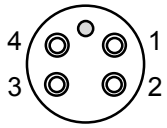

Male Face View

1 Power GND[1]
2 Signal
3 Signal GND[1]
4 Power Vin+

[1]GNDs are connected.

Power	6 – 28 VDC 17 mA @ 12 VDC

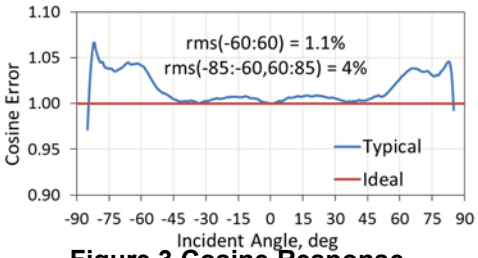

Figure 3 Cosine Response

Telemetry

Type	Logarithmic analog voltage
Formula	$PAR = Im \cdot 10^{\frac{signal - a_0}{a_1}}$, Figure 4
PAR	0.1 – 5000 µmol photons·m^{-2}·s^{-1}
signal	0.125 – 4.000 V
Im	Immersion factor In water 1.3589 In air 1.0
a_0	Offset[2]
a_1	Scaling Factor[2]

[2] a_0, a_1 are listed in the sensor calibration record provided.

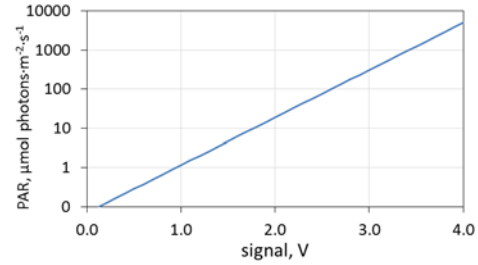

Figure 4 Logarithmic PAR Signal

Operating Temperature

In water	-4 – 40°C
In air	-40 – 40°C

Mechanical

Depth Rating	1000 m	7000 m
Construction	Plastic	Titanium
Weight in air	88 g	182 g
Weight in water	39 g	133 g
Dimensions	Figure 5	Figure 5

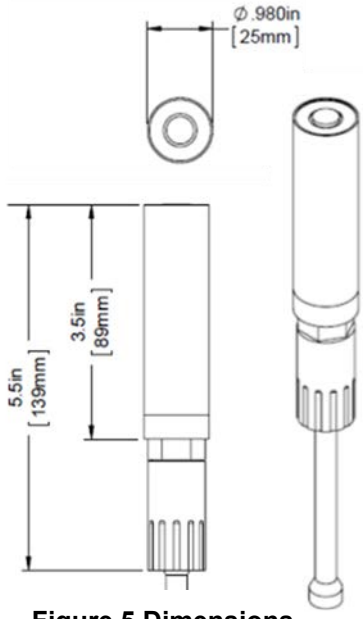

Figure 5 Dimensions

Copyright © 2015 Satlantic LP All rights reserved.

3 Safety

Satlantic equipment should be operated and maintained with extreme care only by personnel trained and knowledgeable in the use of oceanographic electronic equipment.

3.1 Personal Safety

3.1.1 Flooded Instrument

Use EXTREME CAUTION handling any instrument suspected of being flooded. If the instrument leaked at depth it might be pressurized when recovered. Indications of a flooded instrument include short circuits between connectors or an extended gap between the end cap and housing. If an instrument is suspected of being flooded, disconnect its power source, place it in a safe location and contact Satlantic for further instructions.

If the instrument cannot be safety stored away, the following steps may be taken to release the pressure to render the instrument safe. PROCEED AT YOUR OWN RISK. To depressurize the PAR Sensor, slowly unscrew the instrument bulkhead just enough to break the seal with the end cap, allowing trapped water to escape around the connector threads. For the AUV version, slowly unscrew the three end cap retaining screws a quarter turn at a time to allow trapped water to escape. Attempt to drain the instrument completely. Depressurized and drained, the PAR Sensor is safe for normal storage.

3.1.2 Electricity

Use care when handling, connecting and operating power supplies and batteries. A shorted power supply or battery can output high current, harming the operator and damaging equipment.

While trouble-shooting with a multi-meter, take care not to short the probes. Shorts can damage equipment, create safety hazards, and blow internal fuses.

3.2 Equipment Safety

3.2.1 Instruments

Employ measures to protect instruments and cables from being fouled or overrun by the vessel.

3.2.2 Connections

Handle electrical terminations carefully. They are not designed to withstand strain. Disconnect the cables from the components by pulling on the connector heads and not the cables or molded splices. Twisting or wiggling the connector while pulling will damage the connector pins.

3.2.3 Recovery

Do not haul instruments in by the electrical cables unless they are reinforced with mechanical strength members for the purpose. Hauling on electrical cables can cause damage to the instrument port connectors, cables, and splices.

Copyright © 2015 Satlantic LP All rights reserved.

4 Operation

Deploy the PAR sensor in a vertical orientation with the cosine collector pointing upwards as in Figure 1 to measure downwelling irradiance. The field of view is the full hemisphere centered on the cosine collector. The field of view should be as clear of obstructions as possible.

Connect the PAR LOG sensor to a data logger that can supply power within the specified DC voltage range and sample the analog voltage signal.

4.1 PAR Calculation from Logarithmic Analog Signal

The PAR LOG sensor outputs an analog voltage signal in the range, 0.125 - 4.000 V corresponding to a typical PAR range of 0.1 – 5000 µmol photons·m^{-2}·s^{-1}.

To calculate PAR from the logarithmic analog signal, use the following formula:

Equation 1:
$$PAR = Im \cdot 10^{\frac{signal - a_0}{a_1}}$$

Where,

PAR is in units of µmol photons·m^{-2}·s^{-1}
signal is the sensor analog output in Volts
Im is a scaling factor to account for immersion in water determined on a class basis
a_0 is an offset determined by calibration
a_1 is a scaling factor determined by calibration

Coefficients, *Im*, a_0, a_1, are listed on the calibration record provided with each PAR LOG sensor.

4.2 PAR Calibration Coefficients for Sea-Bird Electronics Seasave

The calibration record also lists the derived fit formula coefficients required when using Sea-Bird Electronics Seasoft Seasave Data Acquisition Software to calculate PAR from a Satlantic PAR LOG sensor integrated with a Sea-Bird Electronics CTD.

Seasave (see RD1, Underwater PAR Sensor, p58) uses the following equation to calculate PAR for a sensor with built-in log amplifier:

Equation 2:
$$PAR = \frac{multiplier \times 10^9 \times 10^{\frac{V-B}{M}}}{calibration_constant} + offset$$

The user is required to enter *M*, *B*, *calibration constant*, *multiplier* and *offset* in Seasave.
For the Satlantic PAR LOG sensor, the *offset* is effectively 0.

To make equations 1 and 2 equivalent then:

multiplier = *1.0*
offset = 0
calibration_constant = $10^9/Im$
$B = a_0$
$M = a_1$

Coefficients, *Im*, a_0, a_1, are listed on the calibration record provided with each PAR LOG sensor.

Copyright © 2015 Satlantic LP All rights reserved.

5 Maintenance

5.1 Preventive Maintenance

The PAR Sensor requires virtually no maintenance. Protecting it from impacts, rinsing it with fresh water after each use, and properly storing it with the dummy connector in place will prolong the life of the PAR Sensor. External power sources should always be removed during storage.

The electrical connector and cable are the most vulnerable components of the PAR Sensor. Subconn provides the following guidance for handling connectors:

- Lubricate connector sparingly with silicone grease, such as Dow Corning Molykote 44. (Satlantic recommends Dow Corning DC-4 electrical insulating compound, a lubricant designed for electrical connectors, and DC-111 valve lubricant and sealant.)
- Do not use petroleum based lubricants.
- Any accumulation of sand or mud in the female contact should be removed with fresh water to prevent splaying of the contact and damage to the o-ring seals.
- Do not over tighten bulkhead nuts.
- When disconnecting, pull straight, not at an angle or by moving side to side.
- Do not disconnect by pulling on the cable.
- Avoid sharp bends at cable entry.
- Ensure there are no angular loads on connectors.

Copyright © 2015 Satlantic LP All rights reserved.

6 Warranty

Warranty Period

All Satlantic equipment is covered under a one-year parts and labor warranty from date of purchase.

Restrictions

Warranty does not apply to products that are deemed by Satlantic to be damaged by misuse, abuse, accident or modifications by the customer. The warranty is considered void if any optical or mechanical housing is opened. In addition, the warranty is void if the warranty seal is removed, broken or otherwise damaged.

Provisions

During the one year from date of purchase warranty period, Satlantic will replace or repair, as deemed necessary, components that are defective, except as noted above, without charge to the customer. This warranty does not include shipping charges to and from Satlantic.

Returns

To return products to Satlantic, whether under warranty or not, contact the Satlantic Customer Support Department and request a Returned Material Authorization (RMA) number and provide shipping details. All claims under warranty must be made promptly after occurrence of circumstances giving rise thereto and must be received by Satlantic within the applicable warranty period. Such claims should state clearly the product serial number, date of purchase (and proof thereof) and a full description of the circumstances giving rise to the claim. All replacement parts and/or products covered under the warranty period become the property of Satlantic LP.

Liability

IF SATLANTIC EQUIPMENT SHOULD BE DEFECTIVE OR FAIL TO BE IN GOOD WORKING ORDER THE CUSTOMER'S SOLE REMEDY SHALL BE REPAIR OR REPLACEMENT AS STATED ABOVE. IN NO EVENT WILL SATLANTIC LP BE LIABLE FOR ANY DAMAGES, INCLUDING LOSS OF PROFITS, LOSS OF SAVINGS OR OTHER INCIDENTAL OR CONSEQUENTIAL DAMAGES ARISING FROM THE USE OR INABILITY TO USE THE EQUIPMENT OR COMPONENTS THEREOF.

Copyright © 2015 Satlantic LP All rights reserved.

7 Contact Information

If you have any problems, questions, suggestions or comments about the equipment or manuals, please contact us.

Location

Satlantic LP
Richmond Terminal, Pier 9
3481 North Marginal Road
Halifax, Nova Scotia
B3K 5X8 Canada

Tel: (902) 492-4780
Fax: (902) 492-4781

Email: support@satlantic.com
Web: http://www.satlantic.com

Business Hours

Satlantic is normally open for business between the hours of 9 AM and 5 PM Atlantic Time. Atlantic Time is one hour ahead of Eastern Time. Daylight saving time is in effect from 2:00 a.m. on the second Sunday in March through 2:00 a.m. on the first Sunday in November. Atlantic Standard Time (AST) is UTC-4. Atlantic Daylight Saving Time (ADT) is UTC-3.

Satlantic is not open for business during the following holidays:

New Year's Day	1 January
Heritage Day	Third Monday in February
Good Friday	Friday before Easter Sunday (Easter Sunday is the first Sunday after the full moon on or following March 21st, or one week later if the full moon falls on Sunday)
Victoria Day	First Monday before 25 May
Canada Day	1 July
Halifax Natal Day	First Monday in August
Labour Day	First Monday in September
Thanksgiving Day	Second Monday in October
Remembrance Day	11 November
Christmas Day	25 December

Copyright © 2015 Satlantic LP All rights reserved.

8 Declaration of Conformity

DECLARATION OF CONFORMITY

Company contact details:
Satlantic LP
Richmond Terminal, Pier 9, 3481 North Marginal Road, Halifax, Nova Scotia, B3K 5X8, Canada
Tel: +1 902-492-4780 Fax: +1 902-492-4781 Email: info@satlantic.com

Satlantic LP declares that their:
1) PAR Sensor - Photosynthetically Active Radiation Sensor
2) OCR-500 - Ocean Color Radiometer
3) HyperOCR - Hyperspectral Ocean Color Radiometer
4) SAT-THS - Tilt Heading Sensor.
5) Bioshutter
6) Profiler II
7) ISUS - In Situ Ultraviolet Spectrophotometer
8) STOR-X
9) Alkaline Battery Pack

are classified within the following EU Directive:
Electromagnetic Compatibility Directive 2004/108/EC

and further conform with the following EU Harmonized Standard:
EN 61326-1:2006

Dated: 12 October 2012
Position of signatory: President
Name of Signatory: Marlon Lewis
Signed below:
on behalf of Satlantic LP

Copyright © 2015 Satlantic LP All rights reserved.